HYT

FW-06
06
ELECTRIC TECH

New concept crossover high-performance sports electric motorcycle

-"Hot hatch" in electric motorcycle field-

Original crossover pedal design

100% central figure on the road

FELO ultimate riding experience

06
ABS
ELECTRIC TECH

Max Speed

110KM/H

Max endurance

140KM*

Peak Power

10KW

Peak Torque

58N.M

ELECTRIC TECH
FELO

FELO SIXTH GENERATION ATS TECHNOLOGY

On-going "S" acceleration mode

Powerful and smooth linear output

No delayed response

Vehicle efficiency increased by 7%-9%

Peak torque 58N.m,Wheel torque 336.4N.m

Integrated CTC design

High–quality carbon steel casted frame，1.6 million vibration tests passed
Integrated battery pack Achieving perfect integration of scooter and battery
aMeet high power system requirements
Improve overall strength and safety

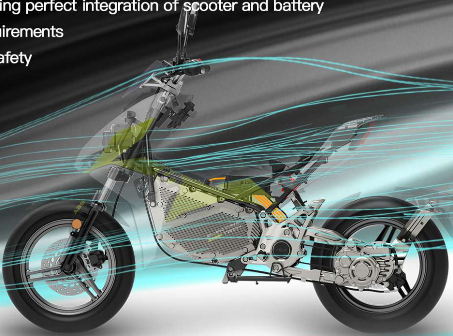

LTE ECU
FELO
VCU

Highly integrated VCU intelligent control

Achieving seamless interaction among riders, scooters and datas

- Isolated CANBUS communication
- Equipped with 4G and Bluetooth communication
- OBD access
- FOC vector control
- OTA upgrade

Lightweight design

Light and flexible, shuttle freely

Total weight only 125kg

Surpass the same class of gasoline models

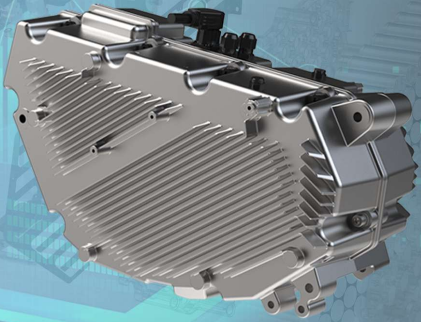

Equipped with 96V 58Ah fully sealed lithium battery

Intelligent battery management system, continuous safety protection, Superior performance, less heat and longer life,
More power output and higher speed support,
1.2kw charger

*5 years or 50,000 km battery warranty
(whichever occurs first)

Motor peak power is 10KW
High performance central motor

Sporting Have fun when driving

DISC brake(Front& Rear)
ABS
Slope sliping avoid

Can be used on extreme road conditions

Racing appearance

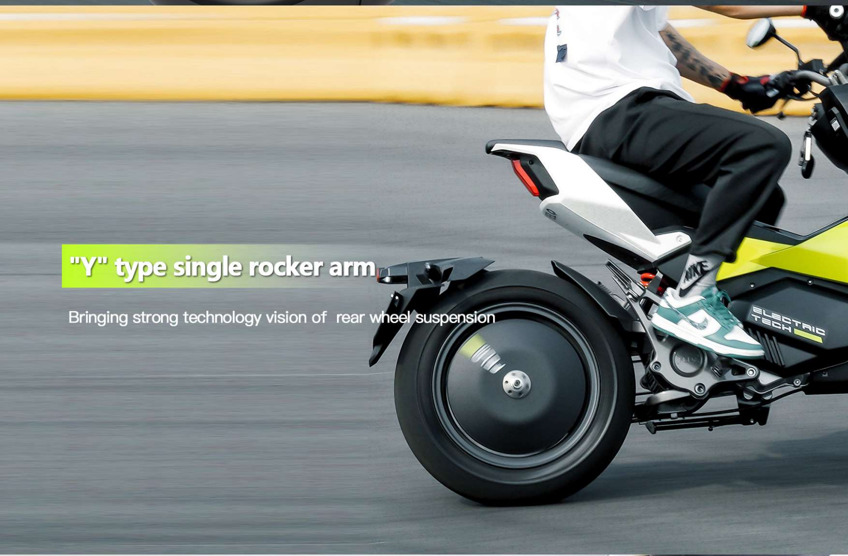
ELECTRIC
TECH

"Y" type single rocker arm

Bringing strong technology vision of rear wheel suspension

LED light for the whole e-motorcycle

Driving at night looks more cool

Continuous integrated headlight design

Large illumination range & high illumination

brightness & high recognition

- lighting distance：25m
- Low beam intensity：25000cd
- High beam intensity：2000cd
- Waterproof grade IP65

14-inch large wheels
CTS CM-TR semi-hot tire

Cushioning , high gripping, low rolling

Unique technology research & Comfortable driving

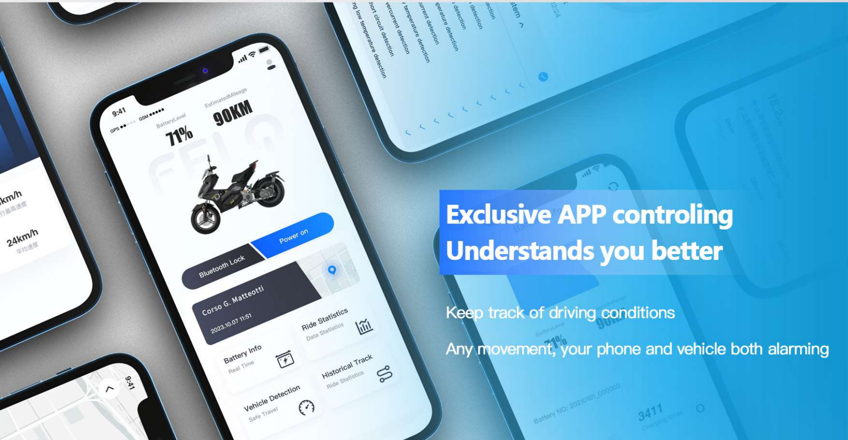

9:41
GPS
GSM
BatteryLevel
71%
EstimatedMileage
90KM
Power on
Bluetooth Lock
Corso G. Matteotti
2023.10.07 11:51
Ride Statistics
Data Statistics
Battery Info
Real Time
Historical Track
Ride Statistics
Vehicle Detection
Safe Travel
24km/h
平均速度

Exclusive APP controling
Understands you better

Keep track of driving conditions

Any movement, your phone and vehicle both alarming

GPS
GSM
9:41
18
0%
Today Electricity
27°C
Temperature
89
Battery Grade
100%
Battery

Keyless one-button start

Inductive keyless start system，Quick unlocking

Smart dashboard

LCD instrument give you a clear display of
vehicle information
under any circumstances, with intelligent computing
residual mileage, riding at ease.

188%
P
88:88
READY
188
KM/H
MPH
TC
RANGE
888
888888
FELO

ELECTRIC TECH
FELO

STOP AND GO DROP AND PARK

- More sensitive side brace sensor
- Higher accuracy of intelligent judgment
- Safer on slope

RACING

FELO
ducati
enel x way
DHL

DNA inherited from international racing

>30% race vehicles sharing technology

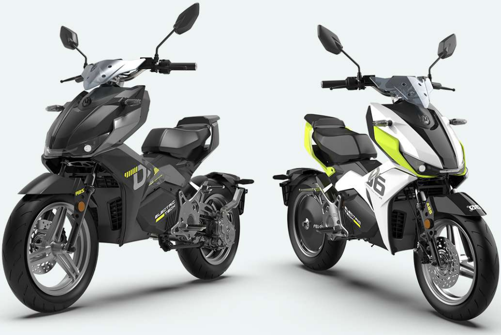

● Dazzling obsidian black   Tech Green ●

PARAMETER

L*W*H	1830*755*1095mm	**Seat Height**	800mm
Wheelbase	1240mm	**Ground Clearance**	162mm
Tire Size	110/80-14;140/70-14	**Weight**	125kg
Range	140km*	**Battery Capacity**	96V* 58Ah
Max. Speed	110km/h	**Battery Warranty**	50，000KM/ 5Years
Rated Power	5kw	**Charge Time**	7~8H
Peak Power	10kw	**Display Type**	LCD
Rated Torque	8.2n.m	**Light**	LED
Peak Torque	58n.m	**Brake System**	DISC with ABS

*The range of 140KM is the test data of 60km/h in the NEDC working condition method of FELO Technology Laboratory. The actual value is affected by various factors such as wind speed, road surface, load, operating habits and so on. for reference only.

*The promotional pictures, functions, performance and other parameters of this product page are for reference only. For specific information, please refer to the actual product.

*Due to the characteristics of lithium batteries, the maximum capacity of the battery will decrease after a period of use.

*FELO app will vary by country and software version.

*The content of this page is for reference only. For information of model specifications and standard configuration, please refer to the information provided by the actual purchase platform.

*Please know in detail whether there are local restrictions on motorcycles before purchasing, so as not to affect your registration. To drive this model, a motorcycle driver's license E or above is required.

*Some parts are subject to change due to batch or procurement cycle reasons. The description on the product page and the manual is slightly different from the actual product, please refer to the actual product.

*The final interpretation right belongs to Shanghai FELO Technology Co., Ltd.

www.hytmoto.com   www.hytmoto.eu